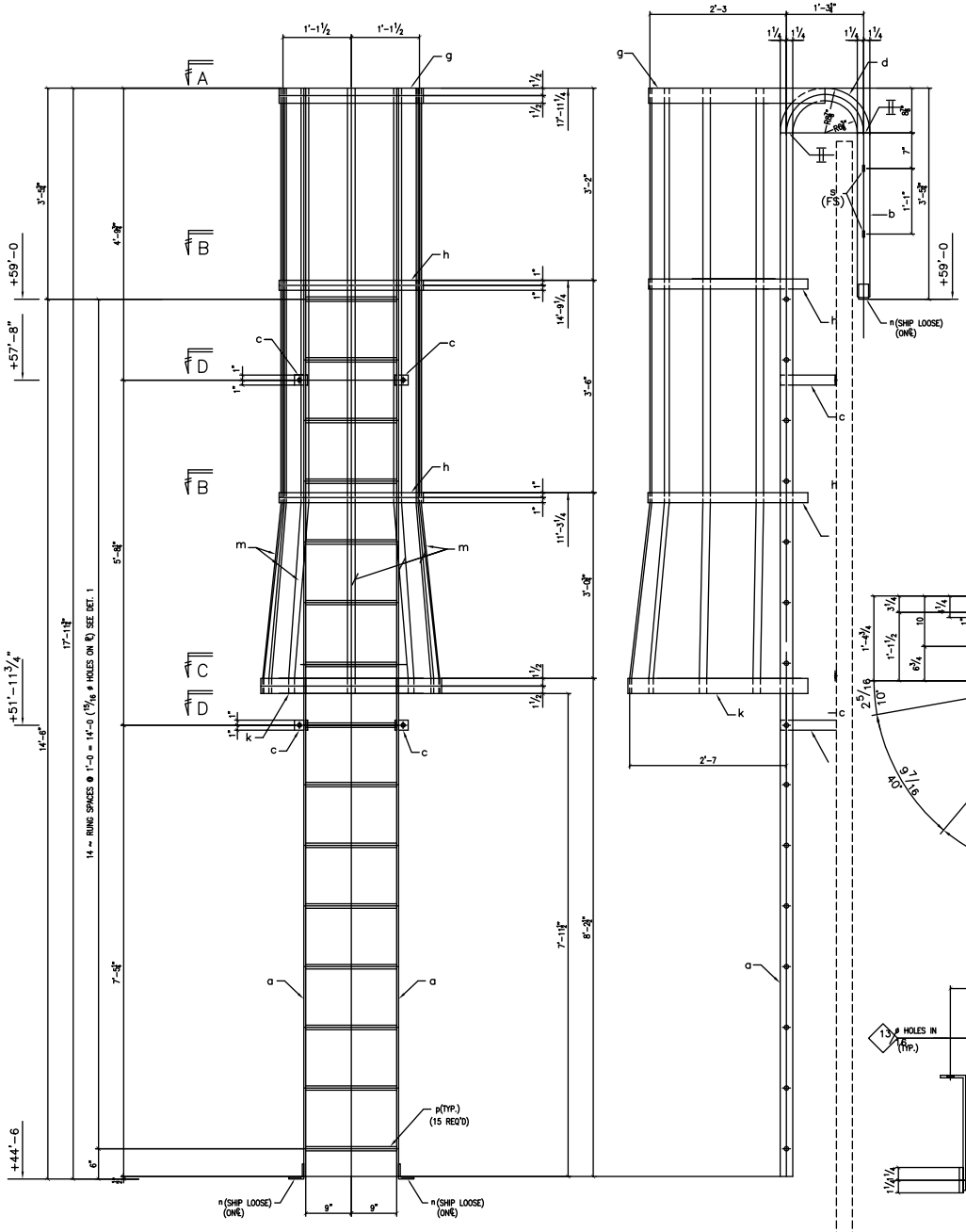

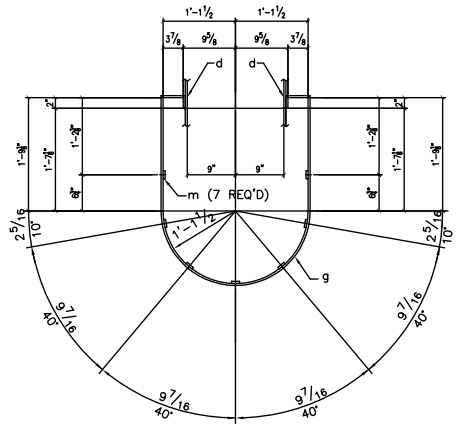

SECT. A

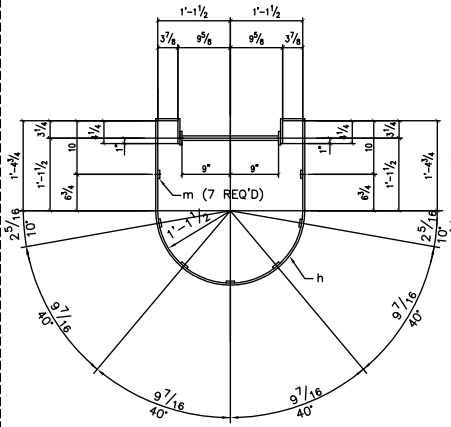

SECT. B

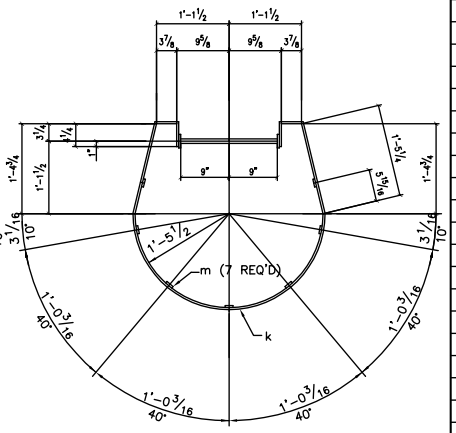

SECT. C

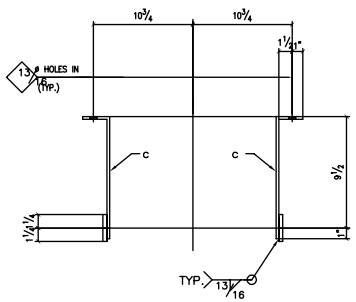

SECT. D

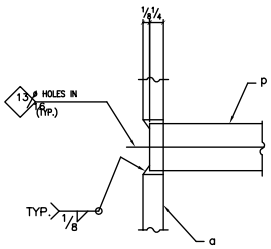

DET. 1

BILL OF MATERIAL

MARK	NO. REQ'D	DESCRIPTION	LENGTH FT.	LENGTH IN.	REMARKS	WEIGHT
18A	ONE	LADDER				
a	2	FB 3/8x2 1/2	17	2 3/8	LN. FT.	
b	2	FB 3/8x2 1/2	2	8 3/8		
c	4	FB 1/4x2 1/2	1	1	BENT	
d	1	PL 3/8x8 7/8	1	5 3/4		
g	1	FB 1/4x3	8	0 1/2	ROLL	
h	2	FB 1/4x2	7	8 1/4	ROLL	
k	1	FB 1/4x3	8	9 3/4	ROLL	
m	7	FB 3/16x1 1/2	10	0		
n	4	L3x3x1/4	0	2		
p	15	3/4ø ROD	1	6 1/2		
s	4	EYELETS				
		FIELD BOLTS (NET)				
		ALL MAT'L A36 UN.				

GENERAL NOTES:

HOLES: –
EDGE DIST.: NOTED
PAINT: NONE

SHOP INSPECTED

DATE	BY	CK'D	REVISIONS	NO.	PRINTED	DATE

TETERS CONSTRUCTION
5550 BORWICK AVENUE SOUTH GATE, CALIFORNIA 90280
TEL. (562) 861-1282 FAX. (562) 861-2123 STATE LIC. #423961 C-51
E-MAIL mteters @ aol.com CITY LIC. #1123

TITLE DESC. LSDDER AT ELEVATOR PLATFORM
JOB NAME: DISNEYLAND TOMORROWLAND PACKAGE THREE
LOCATION: 1313 S. HARBOR BLVD., ANAHEIM, CA
CONTRACTOR: UNITED RIGGERS & ERECTORS, INC.

DWN SK CHK. CM
JOB NO. 808
SHEET NO. 17

PDA Consulting
CONFIDENTIAL